Introduction to Radar Imaging

Margaret Cheney

Outline

- Mathematical model
- Image formation
    - time domain viewpoint
    - frequency domain viewpoint (for small scenes)
- Approximating targets by point clouds
- SAR interferometry

Mathematical Model

Maxwell's equations —-> scalar wave equation

Green's function + Born approximation

$$p(t, \boldsymbol{x}_r; \boldsymbol{x}_s) \propto \int \rho(\boldsymbol{y}) \frac{f''[t - \tau(\boldsymbol{y}, \boldsymbol{x}_s) - \tau(\boldsymbol{y}, \boldsymbol{x}_r)]}{|\boldsymbol{y} - \boldsymbol{x}_s||\boldsymbol{y} - \boldsymbol{x}_r|} d\boldsymbol{y}$$

standard (monostatic) SAR:

$$\boldsymbol{x}_r = \boldsymbol{x}_s = \boldsymbol{\gamma}(s)$$

$$\tau(\boldsymbol{y}, \boldsymbol{x}) = \frac{|\boldsymbol{y} - \boldsymbol{x}|}{c_0} = \frac{|\boldsymbol{\gamma}(s) - \boldsymbol{y}|}{c_0}$$

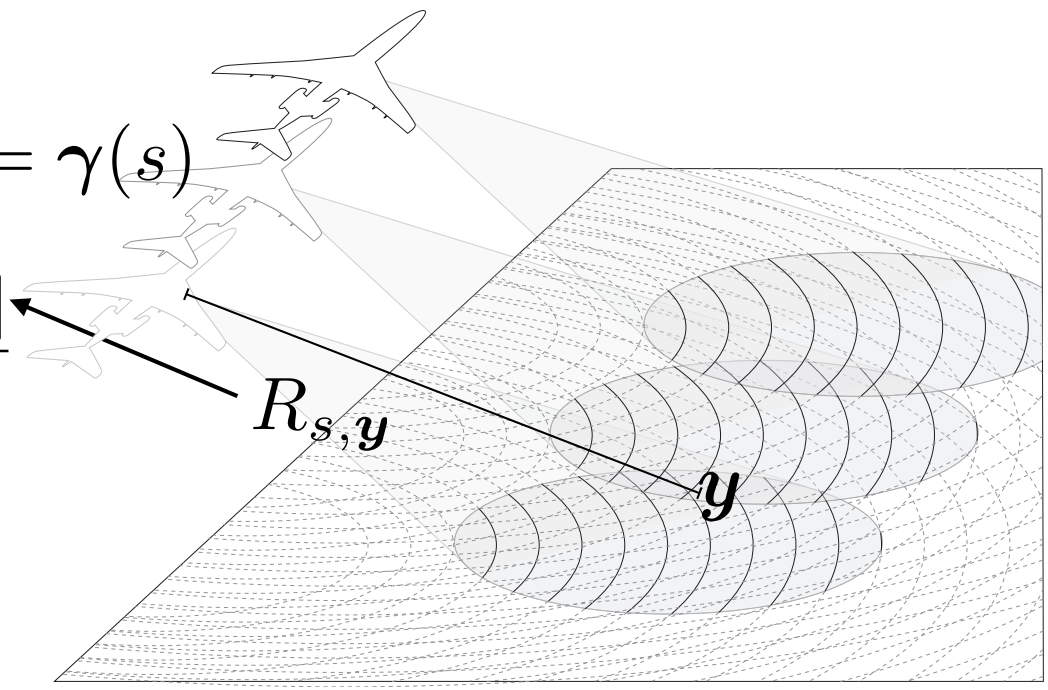

$$p(t, s) \propto \int \rho(\boldsymbol{y}) \frac{f''\left(t - 2R_{s,\boldsymbol{y}}/c_0\right)}{R_{s,\boldsymbol{y}}^2} d\boldsymbol{y}$$

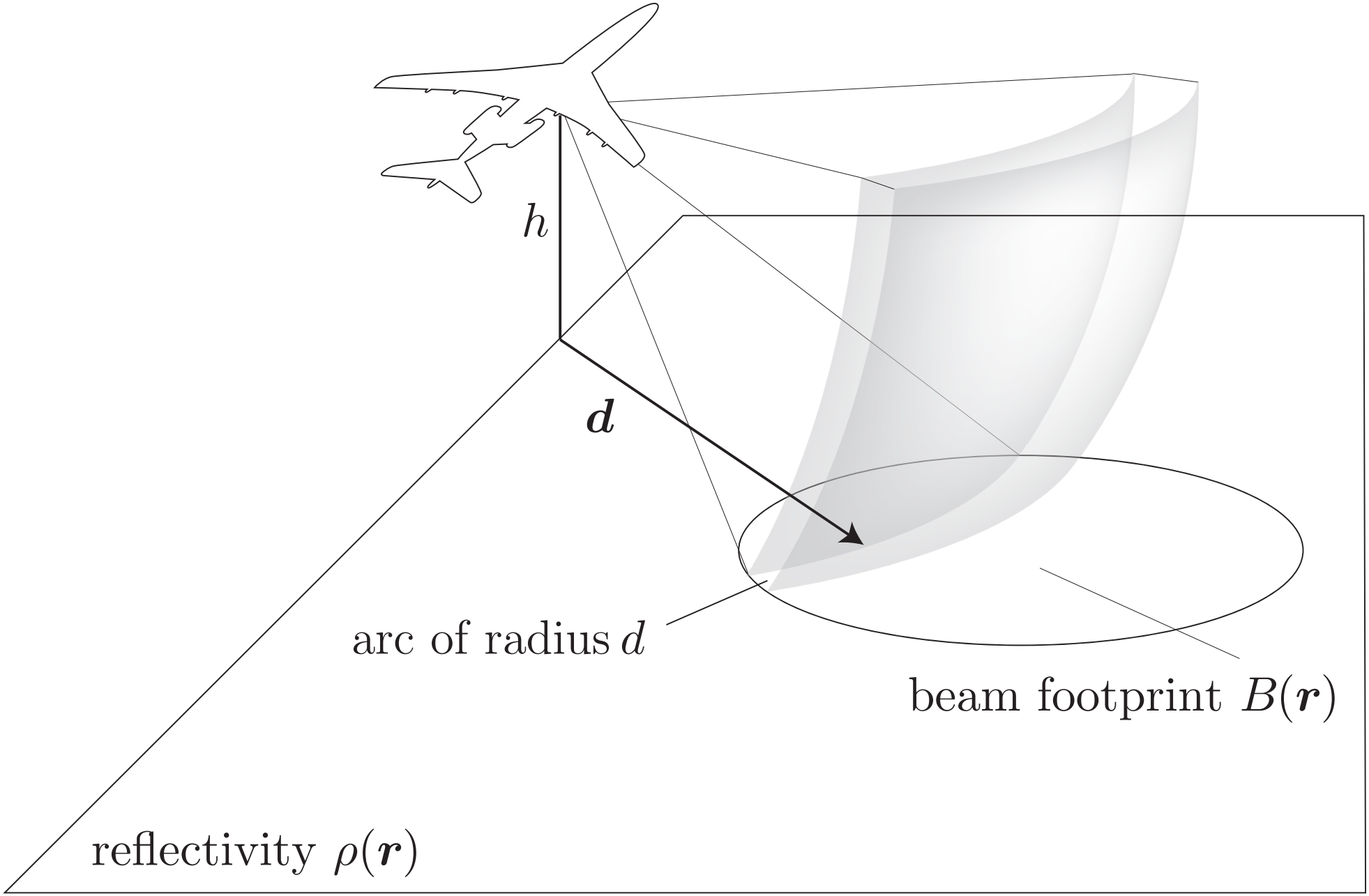

figures from Brett Borden, Naval Postgraduate School

Image formation

$$I(\boldsymbol{y}) = \sum_{\boldsymbol{x}_r, \boldsymbol{x}_s} \mathrm{data}(t = \tau(\boldsymbol{y}, \boldsymbol{x}_s) + \tau(\boldsymbol{y}, \boldsymbol{x}_r),\ \boldsymbol{x}_r; \boldsymbol{x}_s)$$

array imaging

$$= \sum_{s} \mathrm{data}\big(t = 2R_{s,\boldsymbol{y}}/c_0,\ \boldsymbol{\gamma}(s)\big)$$

standard (monostatic) SAR

why does this work?

Imaging from a single viewing position

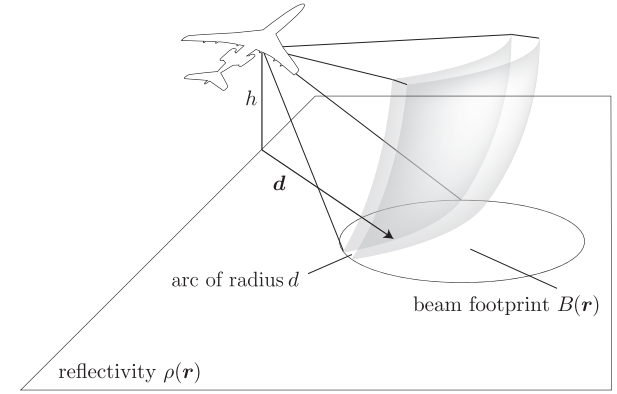

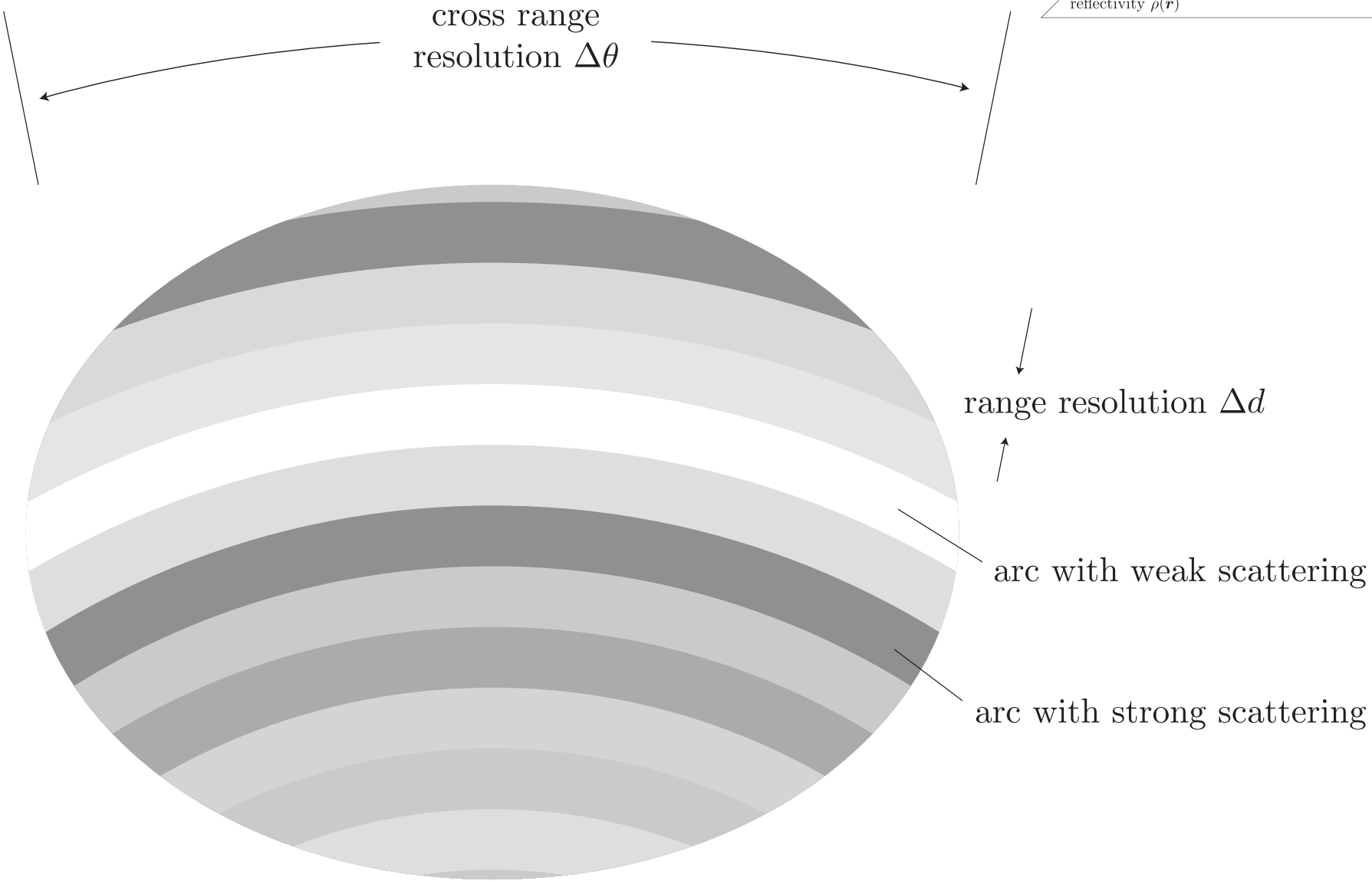

Example with 3 scatterers

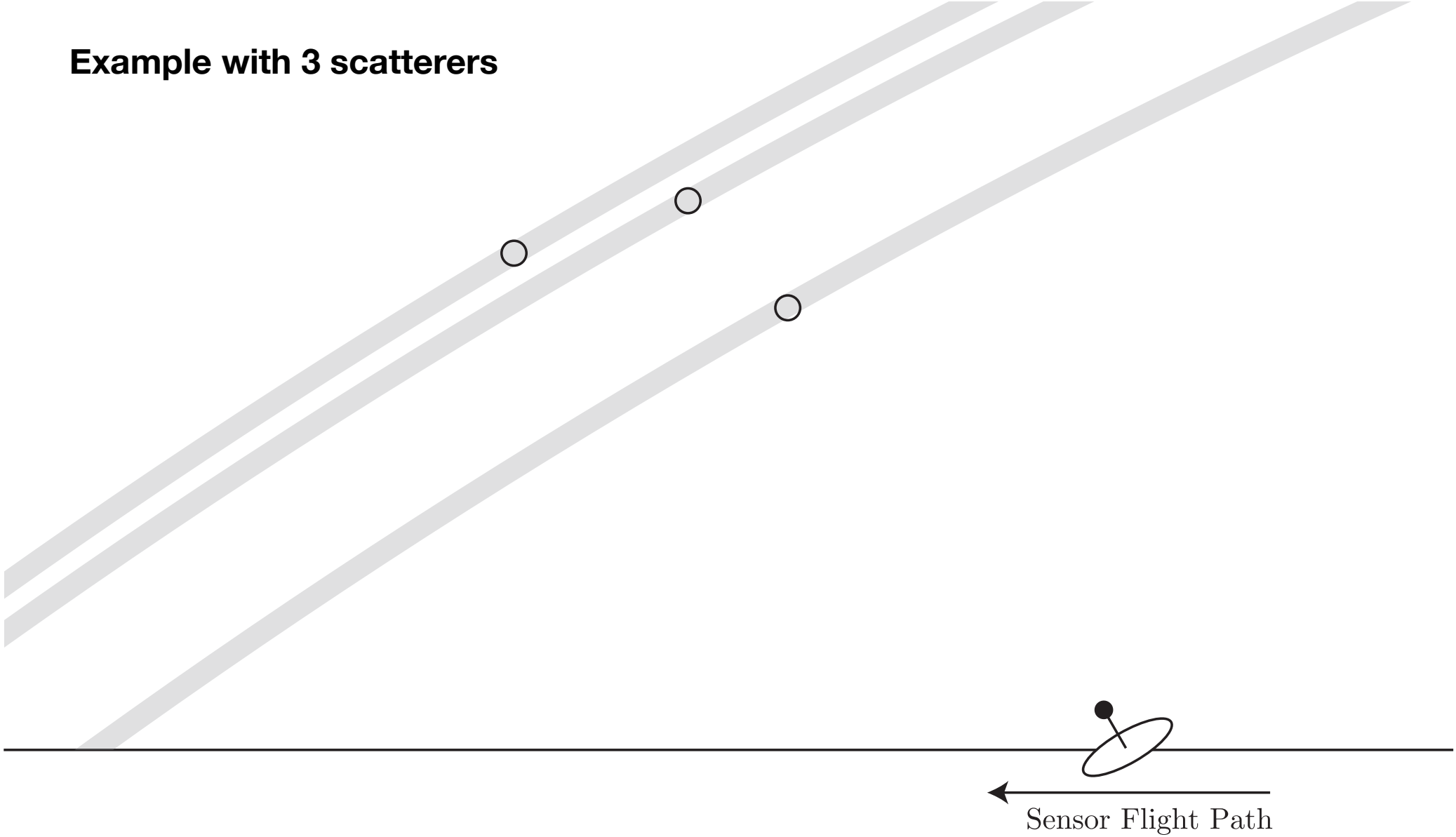

Imaging from a single view

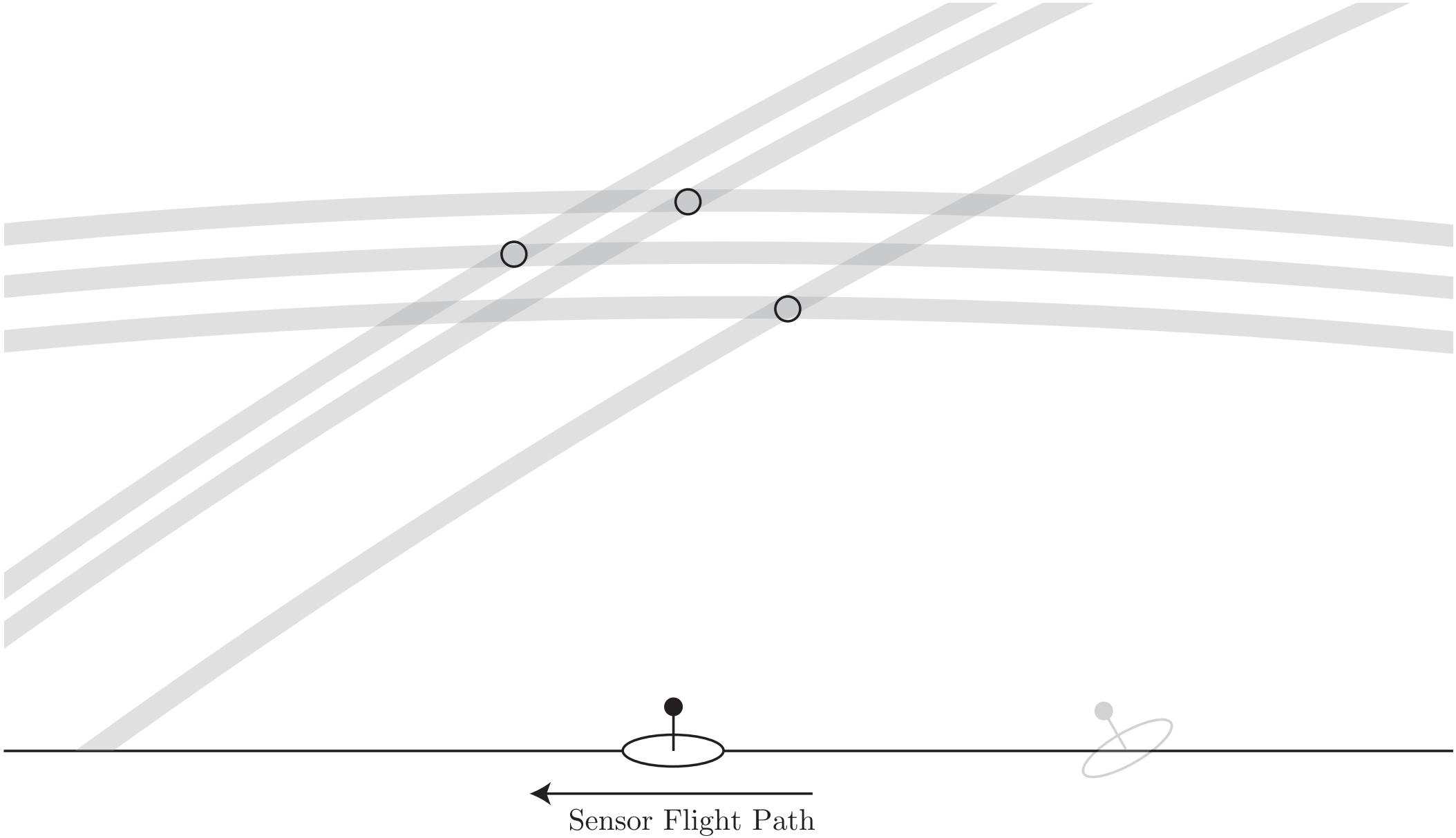

Imaging from two views

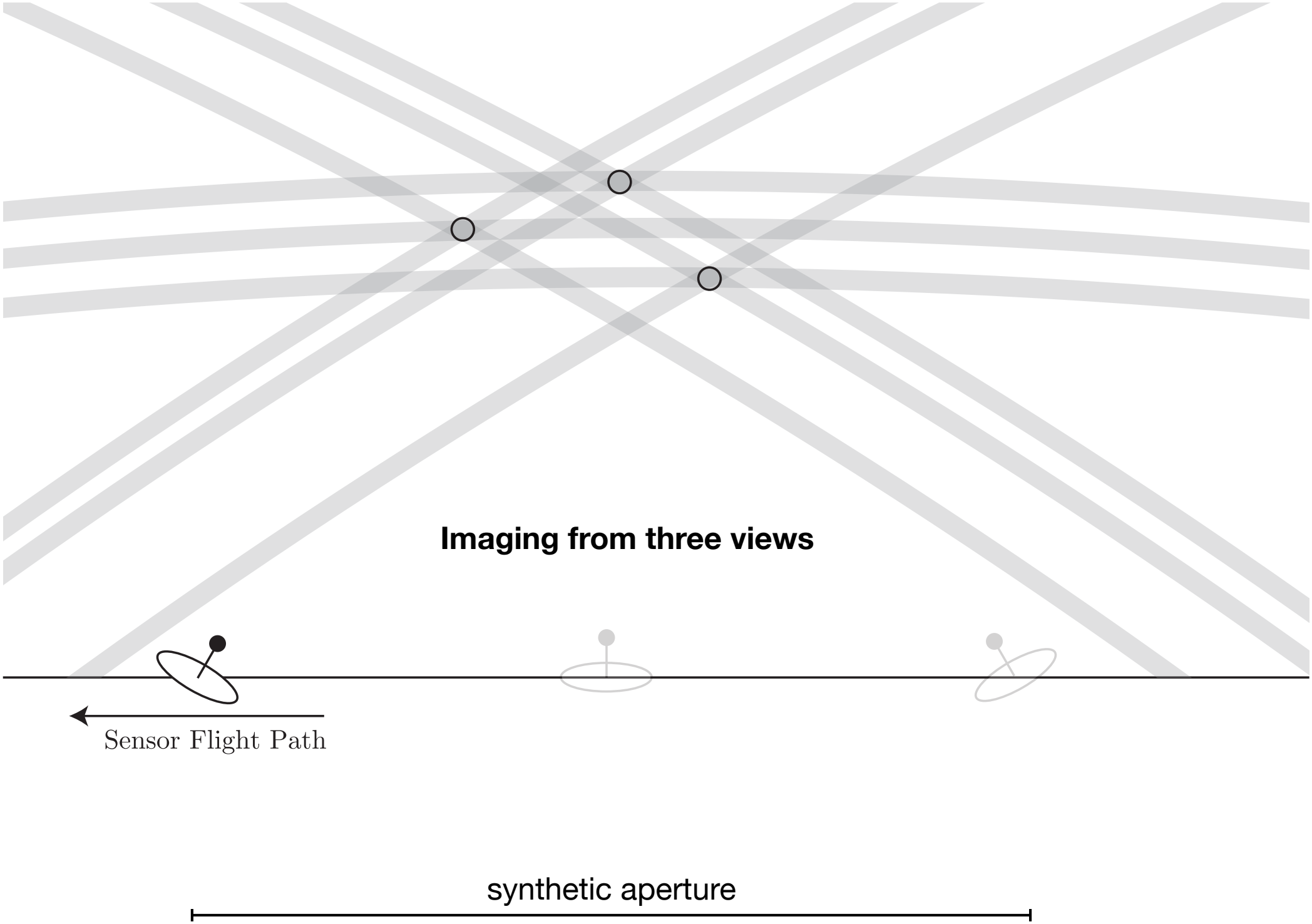
Imaging from three views
Sensor Flight Path
synthetic aperture

Frequency domain viewpoint

time-domain model

$$p(t,s) \propto \int \rho(\boldsymbol{y}) \frac{f''\left(t - 2R_{s,\boldsymbol{y}}/c_0\right)}{R_{s,\boldsymbol{y}}^2} d\boldsymbol{y}$$

Fourier transform in t

$$\Big\downarrow \quad \int \ldots e^{-i\omega t} dt$$

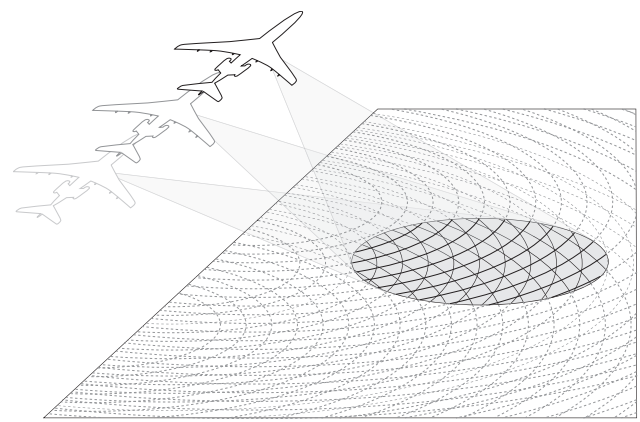

$$P(\omega,s) \propto \int \rho(\boldsymbol{y}) \frac{\omega^2 F(\omega) e^{-2i\omega R_{s,\boldsymbol{y}}/c_0}}{R_{s,\boldsymbol{y}}^2} d\boldsymbol{y}$$

far-field approximation

$$\Big\downarrow \quad R_{s,\boldsymbol{y}} = |\boldsymbol{\gamma}(s) - \boldsymbol{y}| \approx |\boldsymbol{\gamma}| - \widehat{\boldsymbol{\gamma}} \cdot \boldsymbol{y} + \cdots \qquad |\boldsymbol{\gamma}| \gg |\boldsymbol{y}|$$

$$\widehat{\boldsymbol{\gamma}} = \frac{\boldsymbol{\gamma}}{|\boldsymbol{\gamma}|}$$

$$P(\omega,s) \propto \int \rho(\boldsymbol{y}) e^{-2ik\widehat{\boldsymbol{\gamma}}(s)\cdot \boldsymbol{y}} d\boldsymbol{y}$$

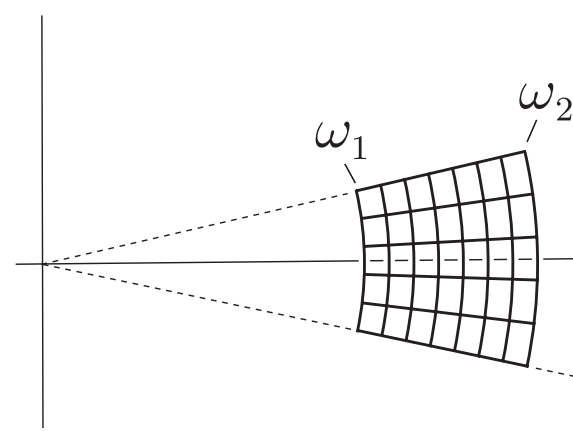

to form image, invert Fourier transform!

$$k = \frac{\omega}{c_0}$$

Approximating targets by point clouds

$$P(\omega, s) \propto \int \rho(\boldsymbol{y}) e^{-2ik\widehat{\gamma}\cdot\boldsymbol{y}} d\boldsymbol{y}$$

k large -> use geometrical optics

main contributions are from
corners, edges, and specular points

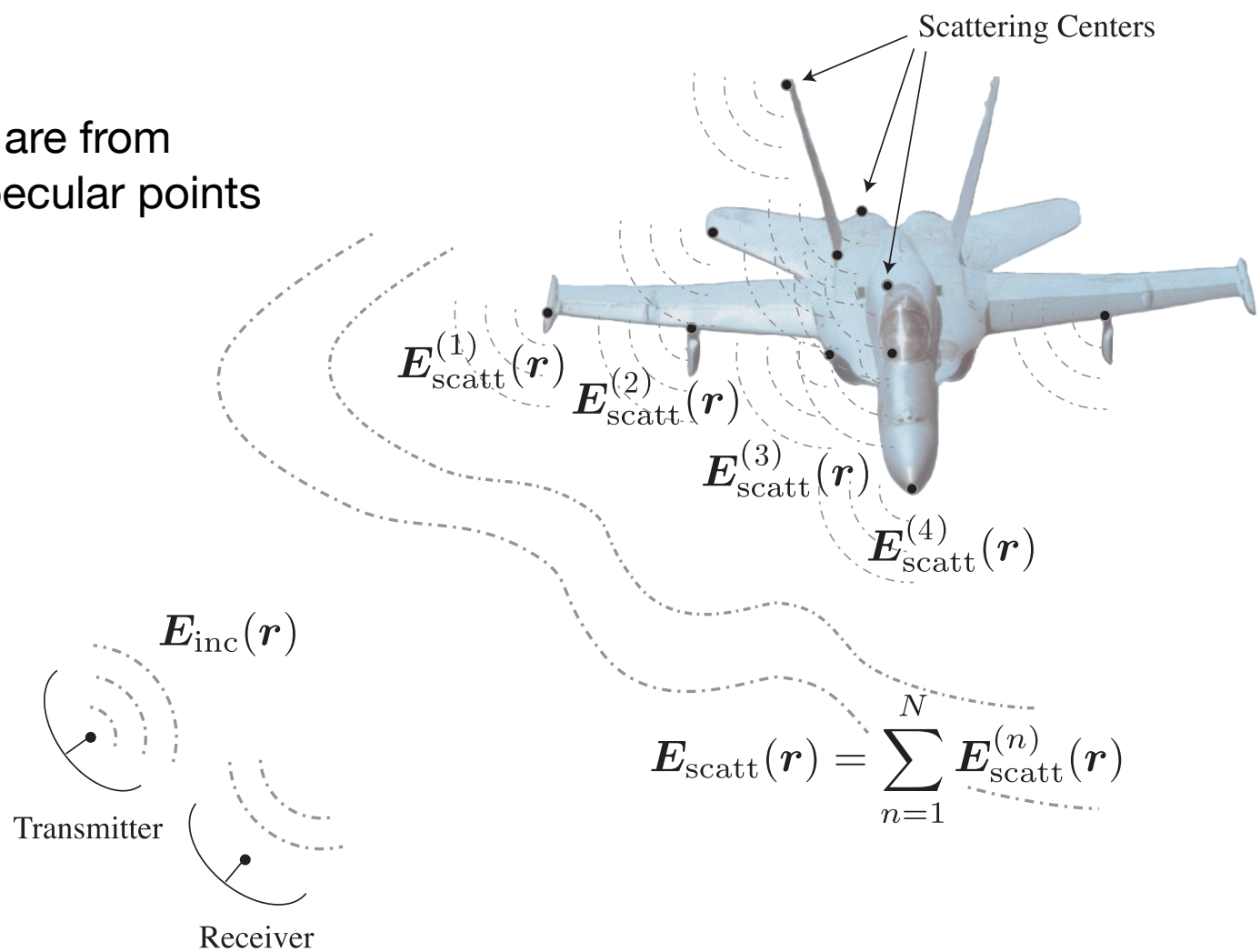

$$\boldsymbol{E}_{\text{scatt}}(\boldsymbol{r}) = \sum_{n=1}^{N} \boldsymbol{E}^{(n)}_{\text{scatt}}(\boldsymbol{r})$$

Interferometry

$$p(t,s) \propto \int \rho(\boldsymbol{y}) \frac{f''\left(t - 2R_{s,\boldsymbol{y}}/c_0\right)}{R_{s,\boldsymbol{y}}^2} d\boldsymbol{y}$$

narrowband

$$f(t) = a(t)e^{i\omega_0 t}$$

$a =$ slowly varying (complex) amplitude

$$p(t,s) \propto \int \rho(\boldsymbol{y}) e^{i\omega_0 (t - 2R_{s,\boldsymbol{y}}/c_0)} \frac{a(t - 2R_{s,\boldsymbol{y}}/c_0)}{R_{s,\boldsymbol{y}}^2} d\boldsymbol{y}$$

scattering takes place on surface

$$\rho(\boldsymbol{y}) = \tilde{\rho}(y_1, y_2)\delta(y_3 - h(y_1, y_2))$$

$$\boldsymbol{y} = \boldsymbol{y}_T + h(\boldsymbol{y}_T)\hat{\boldsymbol{e}}_3 \qquad \boldsymbol{y}_T = (y_1, y_2, 0)$$

$$R_{s,\boldsymbol{y}} = |\boldsymbol{y}_T + h\hat{\boldsymbol{e}}_3 - \boldsymbol{\gamma}| = \underbrace{|\boldsymbol{y}_T - \boldsymbol{\gamma}|}_{R_{s,\boldsymbol{y}_T}} + \underbrace{h(\boldsymbol{y}_T)\hat{\boldsymbol{e}}_3 \cdot \widehat{\boldsymbol{y}_T - \boldsymbol{\gamma}}}_{d(\boldsymbol{y}_T)}$$

$$p(t,s) \approx \int \left[\tilde{\rho}(\boldsymbol{y}_T) e^{2ik_0 d(\boldsymbol{y}_T)}\right] e^{i\omega_0 (t - R_{s,\boldsymbol{y}_T}/c_0)} \frac{a(t - R_{s,\boldsymbol{y}_T}/c_0)}{R_{s,\boldsymbol{y}_T}^2} d\boldsymbol{y}_T$$

target phase encodes height information!